TOTO

Wall-Mounted Handshower (3 Modes)

DBX111CAJF
DBX111CAJF1

Reduce The Water

Aerial Handshower

Gyrostream technology

DBX111CAJF Wall-Mounted Handshower

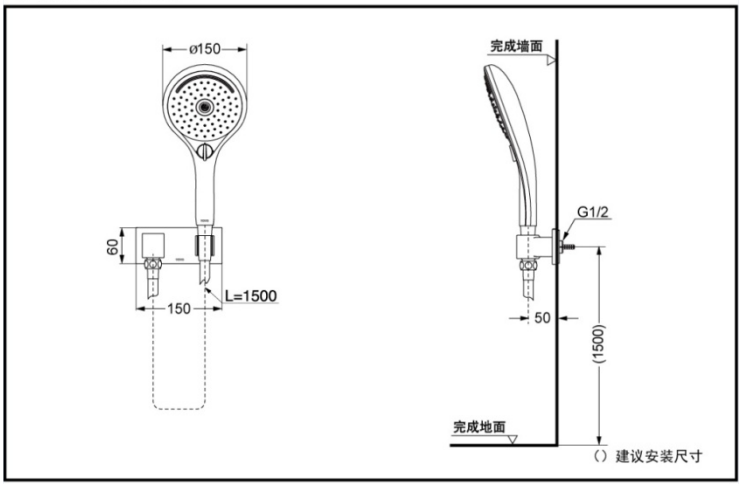

DBX111CAJF1 Wall-Mounted Handshower

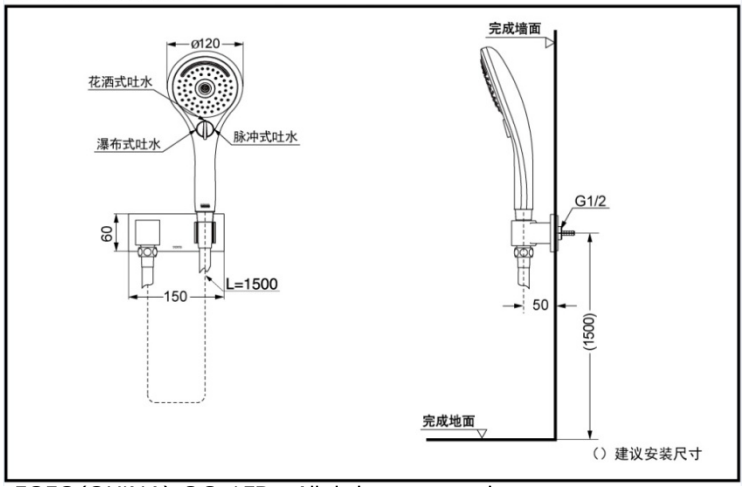

*TOTO(CHINA) CO.,LTD. All rights reserved.

DBX111CAJF
DBX111CAJF1

FEATURES

- Clean and gorgeous profile creates a neat bathing environment.
- Clean and vivid profile.
- Aerial handshower makes showering more comfortable with less water consumption.
- Gyrostream technology amplifies your showering experience.
- Soft cascade water technology creates a more comfortable showering experience.

SPECIFICS

Size:
DBX111CAJF: Φ150mm
DBX111CAJF1: Φ120mm
Water supply:
0.05MPa(dynamic pressure)~ 0.75MPa(static pressure)

OTHERS

Series: CI Contemporary series