TOTO Two-Hole Single-Handle Lavatory Mixer

DL370R
DL370-1R
w/ Drainage Fittings

DL370R

DL370-1R
vessel

FEATURES

- Decorate the space with elegant curves.
- Comfortable cascading water.
- Simple and gorgeous profile.

SPECIFICS

Water Supply:
0.05MPa(dynamic pressure)～0.75MPa(static pressure)
Water Efficiency:
Grade1

OTHERS

Series: CI Contemporary Series

DL370R **Two-Hole Single-Handle Lavatory Mixer (CI Contemporary Series)**

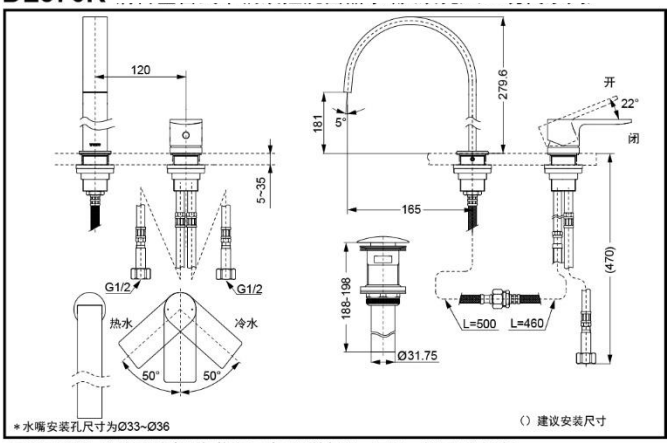

*TOTO公司保留对其产品规格和尺寸更改的权利。届时，恕不另行通知。

DL370-1R **Two-Hole Single-Handle Lavatory Mixer (CI Contemporary Series)**

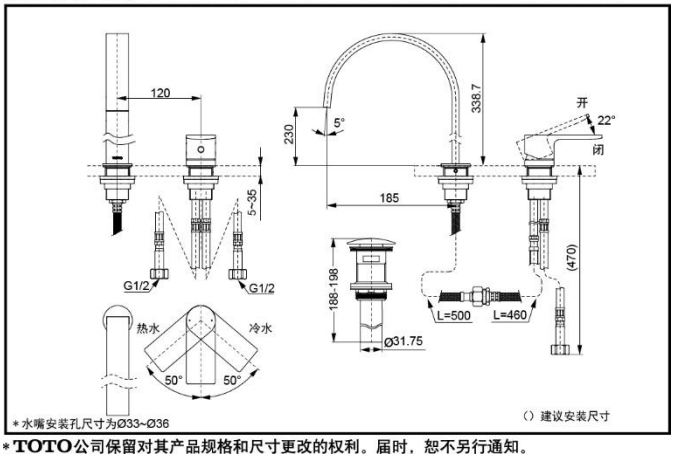

*TOTO公司保留对其产品规格和尺寸更改的权利。届时，恕不另行通知。

*TOTO(CHINA) CO.,LTD. All rights reserved.