TOTO 3-Hole Deck-Mounted Bathtub Mixer

DB357C

DB357C

FEATURES

- Simple vivid contemporary profile decorates the space with a gorgeous curve.
- Elegant and comfortable cascading flow.
- Easy to operate and use.

DB357C 3-Hole Deck-Mounted Bathtub Mixer

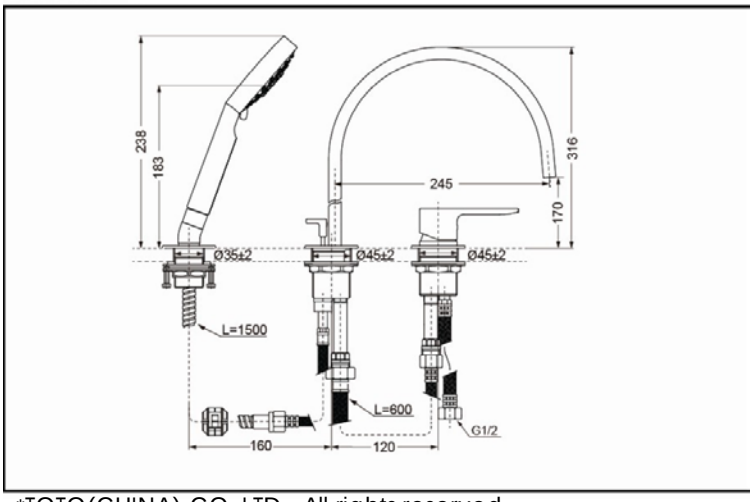

*TOTO(CHINA) CO.,LTD. All rights reserved.

SPECIFICS

Water Supply:
0.05MPa(dynamic pressure)~0.75MPa(static pressure)

OTHERS

Series: CI Contemporary Series