5 Function Showerhead Volume Control Trim (without diverter)

DBX110CM
DB341

DBX110CM

DB341

FEATURES

- Solid brass construction.
- Clean, elegant design.
- Easy to Install and Clean.

SPECIFICS

Applicable Water Pressure:
0.05MPa(dynamic pressure)~
0.75MPa(static pressure)

OTHERS

Series：RESNA

DBX110CM+DB341 Shower Faucets

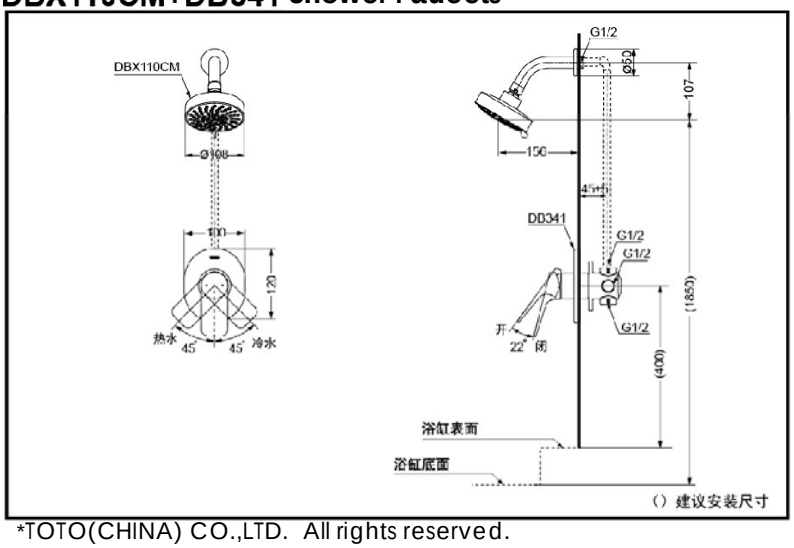

*TOTO(CHINA) CO.,LTD. All rights reserved.